☐ APPROVED ☐ REVISE AND RESUBMIT

☐ APPROVED AS NOTED ☐ REJECTED

This drawing must be checked, signed, and returned before fabrication begins. Please verify all dimensions, equipment positions, finishes, breath guard mounting, and clearances.

SIGNATURE _____ DATE _____

The designs, drawings, renderings, and other documents ("Designs") furnished by The Vollrath Company, L.L.C. ("Vollrath") to you (including anything in electronic format), are owned by Vollrath, its licensors or other providers of those materials and are protected by United States and international copyright, trademark, patent, trade secret, and other intellectual property or proprietary rights laws, as applicable. The Designs may not be duplicated, reproduced, modified, or distributed, without the express written consent of Vollrath. All Designs prepared by Vollrath are provided to you on a confidential basis unless agreed otherwise in writing by Vollrath.

You may not use the Designs for any purpose unless you engage Vollrath to complete the design and construction in accordance with the Design and then only for the purpose of completing the design and construction. It is illegal to reproduce, duplicate, modify, resell, redistribute, lease, loan, or develop derivative work, in whole or in part, from the Designs without the express written consent of Vollrath.

VOLLRATH

1236 N. 18th Street
Sheboygan, WI 53081

vollrathfoodservice.com

REVISIONS

| DATE | NO. | DESCRIPTION |
|---|---|---|
| | | |

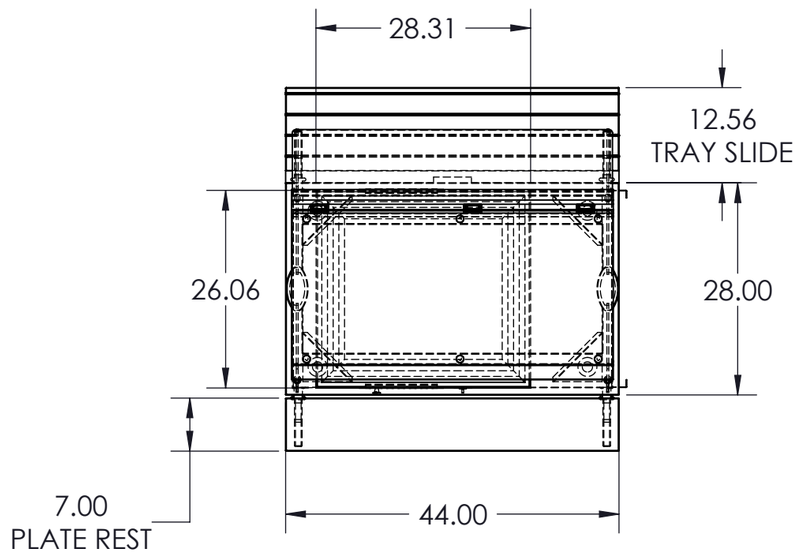


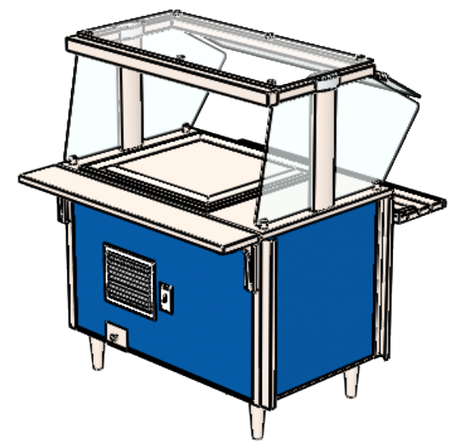

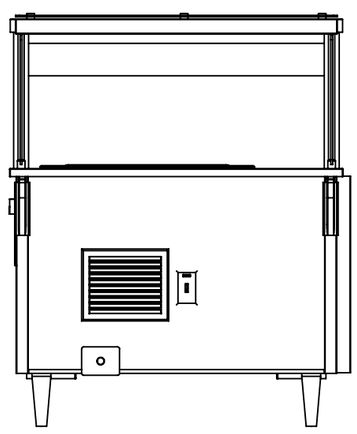

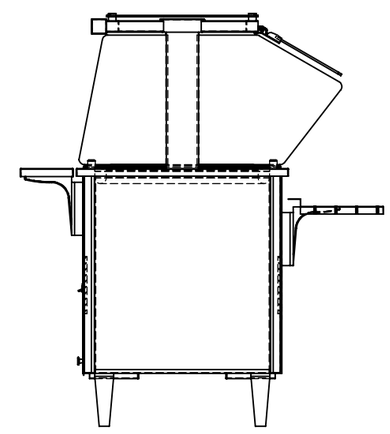

| EQUIPMENT 1 | EQUIPMENT 2 | EQUIPMENT 3 | UNIT VOLTS | UNIT AMPS | UNIT PLUG | BASE FINISH | BASE COLOR |
|---|---|---|---|---|---|---|---|
| UTILITY_SPACE | COLD_FROST | UTILITY_SPACE | 120 | 7.8 | NEMA 5-15P | CUSTOM LAMINATE | FORMICA_851_SPECTRUM_BLUE.JPG |

**Blooming Grove ISD**

PROJECT NUMBER: C-12523

REFERENCE:

DATE: 6/14/2021

SCALE: NTS

DRAWN BY: Steve Tonjes

SHEET TITLE: **VOLLRATH PLAN, FRONT, SIDE**

SHEET NUMBER: 1 of 1

© 2020 The Vollrath Company, L.L.C. All Rights Reserved

THIS DOCUMENT WAS ORGINALLY CREATED ON A 11" x 17" SIZE SHEET